UNO-2372G V2

Small-Size Modular Embedded Box PC with Intel® Celeron® J6412

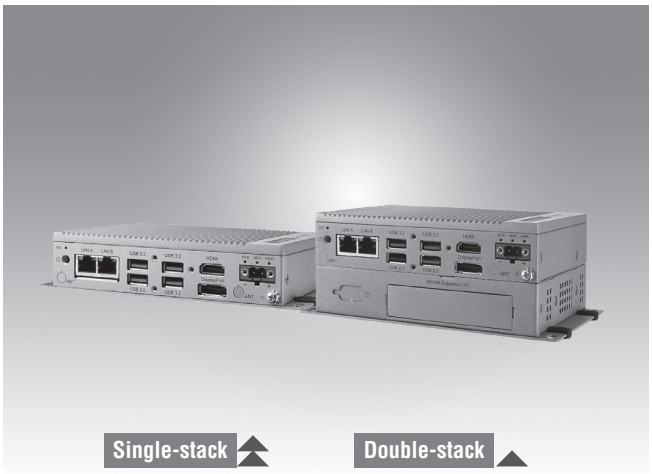

Features

- Intel® Celeron® J6412 quad-core processor with 8GB DDR4 memory
- Compact, robust, fanless and scalable system with high stability
- Optional second stack for supporting extension iDoor module, including wireless connectivity, industrial fieldbus and more I/O ports
- Supports NVME storage with high data-transmission efficiency

Introduction

Advantech's UNO-2000 series of embedded automation computers are highly rugged, fanless systems. The modular design offers vigorous computing performance and flexible scalability with various I/O ports to support IoT Connectivity. The UNO-2372G V2 features high processing capacity, 4K resolution display ports, optimized I/O ports, and expansion options to support wire/ wireless IoT edge data transmission and processing. With an optional second expansion stack which supports Advantech's iDoor technology, system functionalities can be easily extended to satisfy specific application requirements.

Specifications

General

- **Certification** CE, FCC, UL, CCC, BSMI
- **Dimensions (W x D x H)** 150 x 105 x 35 (5.8" x 4.2" x 1.4") for single stack
  150 x 105 x 65 (5.8" x 4.2" x 2.6") with second expansion stack
- **Form Factor** Small
- **Enclosure** Aluminum housing
- **Mount Options** Stand, wall, VESA (optional), DIN rail (optional)
- **Weight (Net)** Single-stack: 0.8 kg (1.8 lb)
  Double-stack: 1.0 kg (2.2 lb)
- **Power Requirement** 10 ~ 36 V_{DC}
- **Power Consumption** 19W (Typical), 54W (Max)
- **OS Support** Microsoft® Windows 10, Windows 11, Advantech Linux (Ubuntu 20.04)
- **Software Compatibility** WISE-Edge365

Hardware

- **BIOS** AMI UEFI (64 Mbit)
- **Watchdog Timer** Programmable timer with 255 intervals (1 ~ 255 sec)
- **Hardware Security** TPM2.0
- **Processor** Intel® Celeron® J6412 quad-core, 2.0 GHz (max. turbo 2.6 GHz)
- **Memory** Built-in 8 GB DDR4, 3200MHz, supports up to 32 GB (single socket)
  Be sure to select thermal pad for CPU/RAM for RAM capacity expansion
- **Graphics Engine** Intel® UHD Graphics
- **Ethernet** Realtek® Ethernet Controller RTL8119I-CG
- **LED Indicators** Power, RTC battery, LAN (active, status), and HDD
- **Expansion/Storage** 1 x mPCIe (PCIe/USB2.0 signal),
  1 x M.2 B key (USB3.0 signal) for 3042/3052 cellular module
  1 x M.2 M key (PCIex2/SATA signal) for 2242 NVME/SSD
  1 x 2.5" SSD/HDD drive bay(up to 9.5 mm height)

I/O

- **Serial Ports** 4 x RS-232/422/485, DB9, 50 ~ 115.2kbps
- **LAN** 2 x RJ45, 10/100/1000 Mbps IEEE 802.3u 1000BASE-T Fast Ethernet
- **USB** 3 x USB 3.2 GEN2, 1 x USB2.0
- **Displays** 1 x HDMI 1.4 (3840 x 2160 @30 Hz)
  1 x DP 1.4 (4096 x 2160 @60 Hz)
- **Power Connector** 1 x 2-pin terminal block
- **Audio** Line-out

Environment

- **Operating Temperature** -20 ~ 60 °C/-4 ~ 140 °F with 0.7m/s airflow
- **Storage Temperature** - 40 ~ 85 °C/-40 ~ 185 °F
- **Relative Humidity** Operating, 95% RH @ 40° C, Non-Condensing
  Non-Operating, 95% RH @ 60° C, Non-Condensing
- **Shock Protection** Operating, IEC 60068-2-27, 50G, half sine, 11ms
- **Vibration Protection** Operating, IEC 60068-2-64, 2Grms, random, 5 ~ 500Hz, 1hr/axis (SSD)
- **Ingress Protection** IP40

All product specifications are subject to change without notice.

Installation Scenario

Stand/Wall Mount

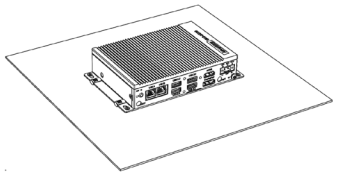

DIN-Rail Mount (Optional)

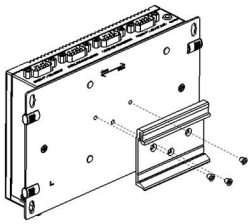

VESA Mount (Optional)

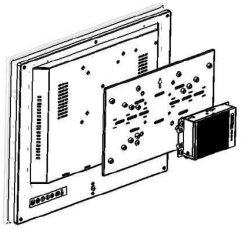

Dimensions

Unit: mm

Single stack

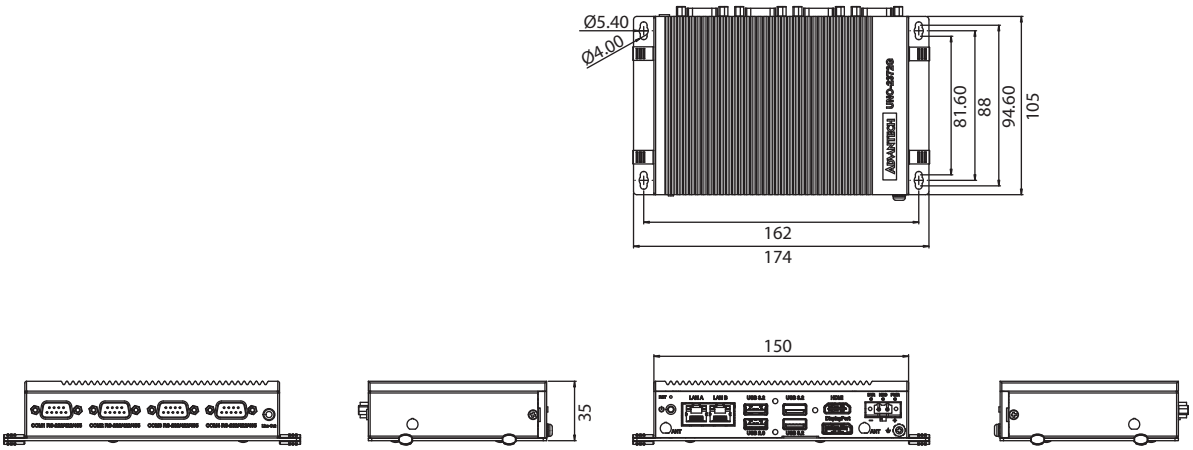

Double stack with with UNO-2372G-EKCE

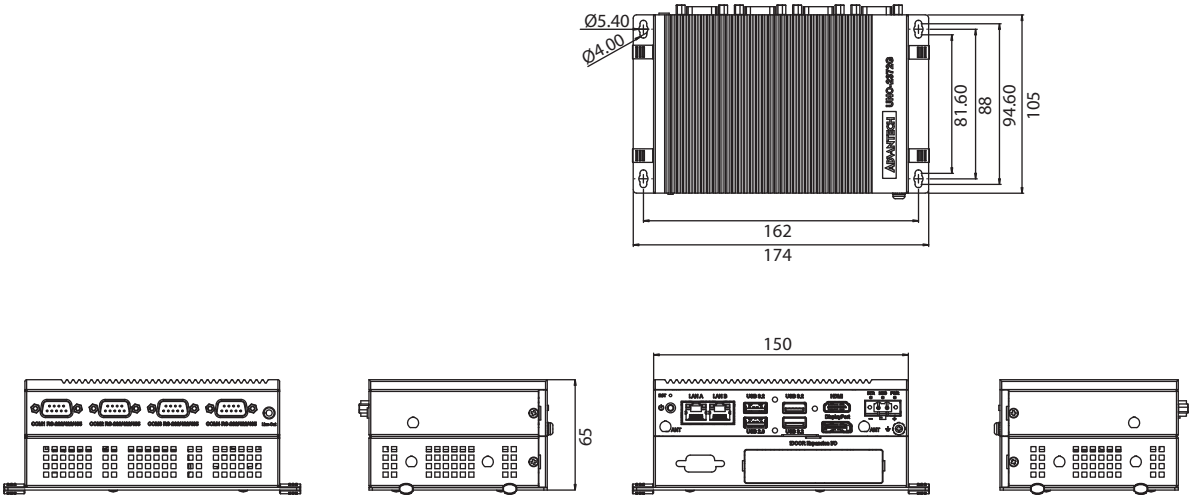

Ordering Information

Ordering P/N	CPU	Memory	M.2	mPCIe slot	iDoor	USB	COM	LAN	Antenna hole	Remark
UNO-2372G-J231AE	Intel Celeron J6412	8G DDR4	M key *1 B key *1	1	1 (with 2nd stack UNO-2372G-EKCE)	4	4	2	4	-
UNO-2372G-J231AU										US Region

Front I/O

Single Stack

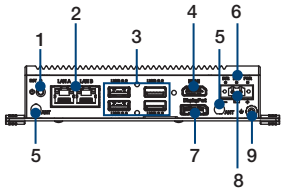

Double Stack

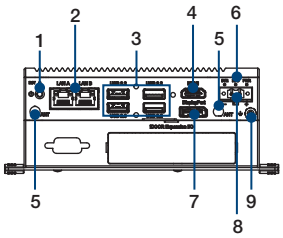

1. Power button
2. RJ45 LAN
3. 3 x USB 3.2 GEN1, 1 x USB2.0
4. HDMI 1.4
5. Reserved antenna
6. Power, Battery, HDD LEDs
7. DisplayPort 1.4
8. Power connector
9. Chassis grounding

Rear I/O

Single Stack

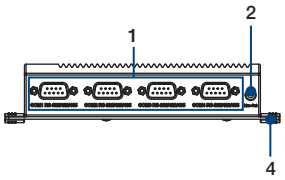

Double Stack

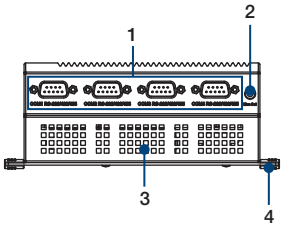

1. RS-232/422/485
2. Line-out
3. iDoor expansion slot
4. Rubber stopper

Optional Accessories

- **96PSA-A60W24T2-3** A/D 100 ~ 240V 60W 24V C14 cord end terminal power adapter
- **1702002600** Power cable, US plug, 1.8 m (industrial grade)
- **1702002605** Power cable, EU plug, 1.8 m (industrial grade)
- **1702031801-11** Power cable, UK plug, 1.8 m (industrial grade)
- **1700000596-11** Power cable, China/Australia plug, 1.8 m (industrial grade)
- **UNO-2000G-DMKAE** UNO-2000 DIN-rail kit
- **UNO-2000G-VMKCE** UNO-2000 VESA mount kit
- **UNO-2000-LKAE** Cable locking kit, 10 units per pack
- **UNO-REPWR-AE** Remote power and reset control kit for UNO (* Need to use with UNO-2372G-EKCE)
- **1990029436N030** CPU Thermal Pad
- **1990026184N000** RAM Thermal Pad

Embedded OS

- **20704WX1ES0017** Img Win10 LTSC V6.08 B040 UNO-2372G_V2 Entry
- **20704U20DS0008** Image AdvLinuxTu-IOTG_x64 V3.4.1 for UNO series
- **20701WLE1S0000** Img WIN11LTSC v7.01 B003 for UNO-2372G_V2 Entry

Please note: If some optional modules are offered with the system, additional system certificates may be required in certain regions/countries.
Please contact Advantech for certificate compliance.

Extended Module

UNO-2372G-EKCE

Second stack module for supporting 1*iDoor on UNO-2372G V2

Specifications

General	
Ports	1 x iDOOR (Chassis only)
Dimensions	150 x 105 x 30 mm
Weight	200g
Antenna hole	4

Ordering Information

P/N	Description
UNO-2372G-EKCE	UNO-2372G V2 2nd stack expansion module

iDoor Modules

supporting by second extended stack
Contact Advantech for more compatible iDoor solutions.

Compatible With mPCIe Slot

- **PCM-2300MR-BE** MRAM, 4 MB, mPCIe
- **PCM-23U1DG-CE** USB slot w/ lock for USB dongle, half-size mPCIe
- **PCM-24D2R2-BE** 2-Port Isolated RS-232, mPCIe, DB9
- **PCM-24D2R4-BE** 2-Port Isolated RS-422/485, mPCIe, DB9
- **PCM-24D4R2-BE** 4-Port Non-Isolated RS-232, mPCIe, DB37
- **PCM-24D4R4-BE** 4-Port Non-Isolated RS-422/485, mPCIe, DB37
- **PCM-24R1TP-BE** 1-Port Gigabit Ethernet, mPCIe, RJ45
- **PCM-24R2GL-AE** 2-Port Gigabit Ethernet, mPCIe, RJ45
- **PCM-24S2WF-CE** WIFI 802.11 a/b/g/n/ac 2T2R w/BT4.1, Intel AC9260
- **PCM-24U2U3-BE** 2-Port USB 3.0, mPCIe
- **PCM-26D2CA-BE** 2-Port CANBus, mPCIe, DB9 x 2 (PCIe Type)
- **PCM-26D2CA-CE** 2-Port CANBus, mPCIe, DB9 x 2 (USB Type)
- **PCM-27D24DI-AE** 24-Channel Isolated Digital I/O w/ counter, mPCIe, DB37

Compatible With M.2 B key Slot

- **PCM-34D2R2-AE** 2-Port Isolated RS-232, M.2 B key (2242, USB), DB9
- **PCM-34D2R4-AE** 2-Port Isolated RS-422/485, M.2 B key (2242, USB), DB9
- **PCM-34D4R2-AE** 4-Port Non-Isolated RS-232, M.2 B key (2242, USB), DB37 cable
- **PCM-34D4R4-AE** 4-Port Non-Isolated RS-422/485, M.2 B key (2242, USB), DB37 cable

Compatible With M.2 M key Slot

- **PCM-34R1TP-AE** 1-Port 2.5Gigabit Ethernet, Intel® i225 B+M key (3042, PCIex1)
- **PCM-34R2GL-AE** 2-Port Gigabit Ethernet, Intel® I350, B+M Key (2242, PCIex1)
- **PCM-37D24DI-AE** 24ch Isolation Digital I/O, 16DI/ 8DO, DB37 x1, B+M Key (3042, PCIex1)